REV.#4 02/05/2016

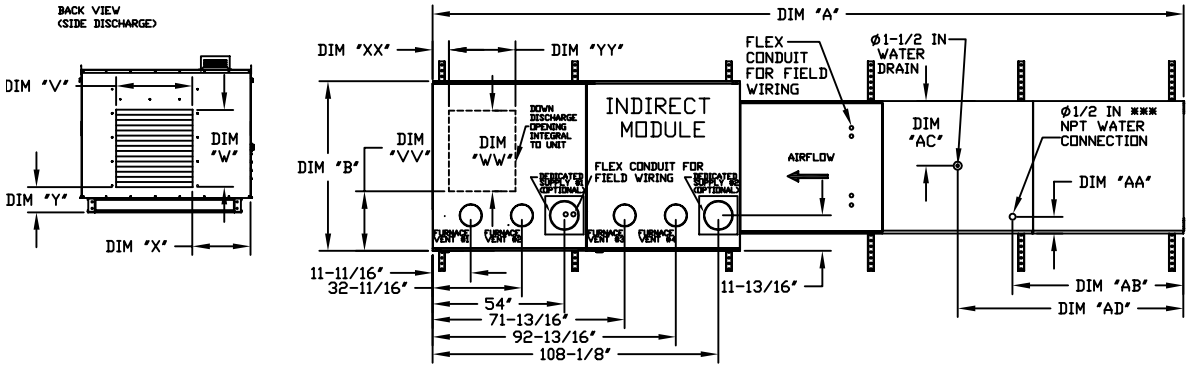

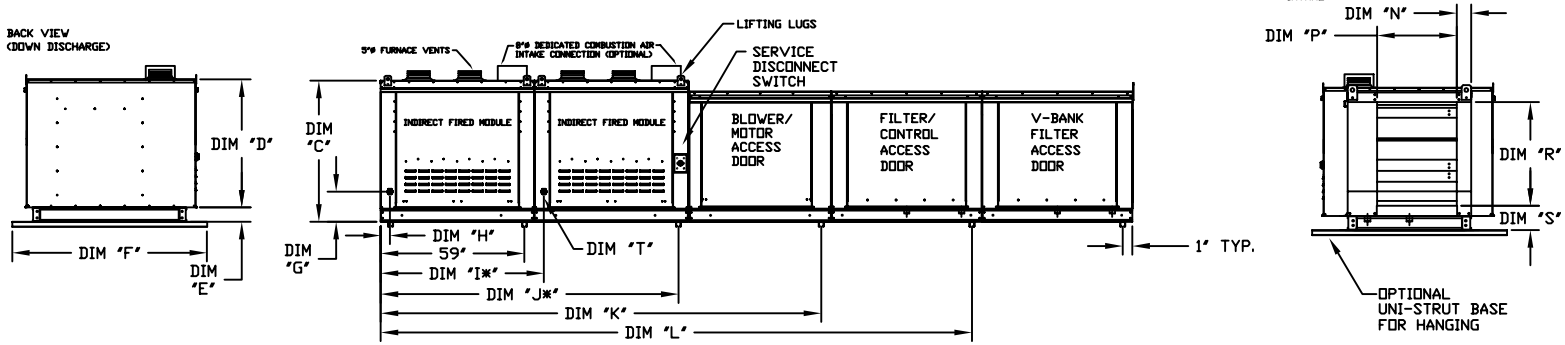

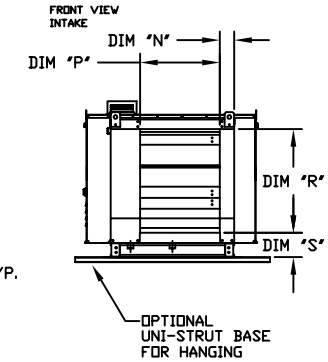

ALL DIMENSIONS ARE NOMINAL AND GIVEN IN INCHES.

MODEL	UNIT DIMENSIONS												INTAKE OPENING				SIDE DISCHARGE OPENING				DOWN DISCHARGE OPENING				GAS CONNECTION	# OF	WATER INLET		DRAIN OPENING	
	A	B	C	D	E	F	G	H	I*	J*	K	L	N	P	R	S	V	W	X	Y	VV	WW	XX	YY	"T" (NPT)	FURNACES	AA	AB	AC	AD
1-IBT.150-G10	156-3/4	49-1/2	39-9/16	35-13/16	3-3/4	60	8-3/4	2-11/16	N/A	N/A	91-1/4	123-3/8	3-1/8	16-3/4	21-7/8	5-3/4	17-3/4	17-3/4	18-1/2	7-1/4	3	16-3/4	3-1/8	21	3/4	1	4-1/2	38-1/2	13	48-1/4
1-IBT.200-G10	156-3/4	49-1/2	39-9/16	35-13/16	3-3/4	60	8-3/4	2-11/16	N/A	N/A	91-1/4	123-3/8	3-1/8	16-3/4	21-7/8	5-3/4	17-3/4	17-3/4	18-1/2	7-1/4	3	16-3/4	3-1/8	21	3/4	1	4-1/2	38-1/2	13	48-1/4
1-IBT.300-150-150-G10	156-3/4	49-1/2	39-9/16	35-13/16	3-3/4	60	8-3/4	2-11/16	N/A	N/A	91-1/4	123-3/8	3-1/8	16-3/4	21-7/8	5-3/4	17-3/4	17-3/4	18-1/2	7-1/4	3	16-3/4	3-1/8	21	3/4	2	4-1/2	38-1/2	13	48-1/4
1-IBT.400-200-200-G10	156-3/4	49-1/2	39-9/16	35-13/16	3-3/4	60	8-3/4	2-11/16	N/A	N/A	91-1/4	123-3/8	3-1/8	16-3/4	21-7/8	5-3/4	17-3/4	17-3/4	18-1/2	7-1/4	3	16-3/4	3-1/8	21	3/4	2	4-1/2	38-1/2	13	48-1/4
2-IBT.200-G15	164-3/4	49-1/2	39-9/16	35-13/16	3-3/4	60	8-3/4	2-11/16	N/A	N/A	99-1/4	131-3/8	5-1/8	24-3/4	28-7/8	5-3/4	24-1/2	17-3/4	18-1/2	7-1/4	5	24	3-1/8	21	1	1	4-1/2	38-1/2	18	48-1/4
2-IBT.300-G15	164-3/4	49-1/2	53-7/8	50-1/8	3-3/4	60	8-3/4	2-11/16	N/A	N/A	99-1/4	131-3/8	5-1/8	24-3/4	28-7/8	5-3/4	24-1/2	24-1/2	18-1/2	7-1/4	5	24	3-1/8	21	1	1	4-1/2	38-1/2	18	48-1/4
2-IBT.400-G15	164-3/4	49-1/2	53-7/8	50-1/8	3-3/4	60	8-3/4	2-11/16	N/A	N/A	99-1/4	131-3/8	5-1/8	24-3/4	28-7/8	5-3/4	24-1/2	24-1/2	18-1/2	7-1/4	5	24	3-1/8	21	1	1	4-1/2	38-1/2	18	48-1/4
2-IBT.400-200-200-G15	164-3/4	49-1/2	39-9/16	35-13/16	3-3/4	60	8-3/4	2-11/16	N/A	N/A	99-1/4	131-3/8	5-1/8	24-3/4	28-7/8	5-3/4	24-1/2	17-3/4	18-1/2	7-1/4	5	24	3-1/8	21	1	2	4-1/2	38-1/2	18	48-1/4
2-IBT.600-300-300-G15	164-3/4	49-1/2	53-7/8	50-1/8	3-3/4	60	8-3/4	2-11/16	N/A	N/A	99-1/4	131-3/8	5-1/8	24-3/4	28-7/8	5-3/4	24-1/2	24-1/2	18-1/2	7-1/4	5	24	3-1/8	21	1	2	4-1/2	38-1/2	18	48-1/4
2-IBT.800-400-400-G15	164-3/4	49-1/2	53-7/8	50-1/8	3-3/4	60	8-3/4	2-11/16	N/A	N/A	99-1/4	131-3/8	5-1/8	24-3/4	28-7/8	5-3/4	24-1/2	24-1/2	18-1/2	7-1/4	5	24	3-1/8	21	1	2	4-1/2	38-1/2	18	48-1/4
3-IBT.400-G18	181-3/4	57-3/4	57-1/16	51-13/16	5-1/4	72	10-3/4	2-11/16	N/A	N/A	104-1/8	142-1/4	4-5/8	29-1/4	33-7/8	7-1/2	27-1/2	31	18-1/2	8-3/4	6-3/4	26-1/2	4-1/8	26-1/2	1	1	4-1/2	44	20	57-1/4
3-IBT.600-300-300-G18	181-3/4	57-3/4	57-1/16	51-13/16	5-1/4	72	10-3/4	2-11/16	N/A	N/A	104-1/8	142-1/4	4-5/8	29-1/4	33-7/8	7-1/2	27-1/2	31	18-1/2	8-3/4	6-3/4	26-1/2	4-1/8	26-1/2	1	2	4-1/2	44	20	57-1/4
3-IBT.800-400-400-G18	181-3/4	57-3/4	57-1/16	51-13/16	5-1/4	72	10-3/4	2-11/16	N/A	N/A	104-1/8	142-1/4	4-5/8	29-1/4	33-7/8	7-1/2	27-1/2	31	18-1/2	8-3/4	6-3/4	26-1/2	4-1/8	26-1/2	1	2	4-1/2	44	20	57-1/4
3-IBT.1000-300-300-400-G18	241-7/8	57-3/4	57-1/16	51-13/16	5-1/4	72	10-3/4	2-11/16	62-13/16	119-1/8	164-1/4	202-3/8	4-5/8	29-1/4	33-7/8	7-1/2	27-1/2	31	18-1/2	8-3/4	6-3/4	26-1/2	4-1/8	26-1/2	1	3	4-1/2	44	20	57-1/4
3-IBT.1200-400-400-400-G18	241-7/8	57-3/4	57-1/16	51-13/16	5-1/4	72	10-3/4	2-11/16	62-13/16	119-1/8	164-1/4	202-3/8	4-5/8	29-1/4	33-7/8	7-1/2	27-1/2	31	18-1/2	8-3/4	6-3/4	26-1/2	4-1/8	26-1/2	1	3	4-1/2	44	20	57-1/4
4-IBT.400-920	195-1/16	57-3/4	57-1/16	51-13/16	5-1/4	72	10-3/4	2-11/16	N/A	N/A	123-3/16	158-7/16	4-5/8	36-1/4	41-7/8	7-1/2	28-1/2	34	18-1/2	8-3/4	8-1/2	26-1/2	4-1/8	26-1/2	1	1	4-1/2	41-1/8	23-1/2	52-7/8
4-IBT.800-400-400-920	195-1/16	57-3/4	57-1/16	51-13/16	5-1/4	72	10-3/4	2-11/16	N/A	N/A	123-3/16	158-7/16	4-5/8	36-1/4	41-7/8	7-1/2	28-1/2	34	18-1/2	8-3/4	8-1/2	26-1/2	4-1/8	26-1/2	1	2	4-1/2	41-1/8	23-1/2	52-7/8
4-IBT.1000-300-300-400-920	255-3/16	57-3/4	57-1/16	51-13/16	5-1/4	72	10-3/4	2-11/16	62-13/16	119-1/8	183-5/16	218-9/16	4-5/8	36-1/4	41-7/8	7-1/2	28-1/2	34	18-1/2	8-3/4	8-1/2	26-1/2	4-1/8	26-1/2	1	3	4-1/2	41-1/8	23-1/2	52-7/8
4-IBT.1200-400-400-400-920	255-3/16	57-3/4	57-1/16	51-13/16	5-1/4	72	10-3/4	2-11/16	62-13/16	119-1/8	183-5/16	218-9/16	4-5/8	36-1/4	41-7/8	7-1/2	28-1/2	34	18-1/2	8-3/4	8-1/2	26-1/2	4-1/8	26-1/2	1	3	4-1/2	41-1/8	23-1/2	52-7/8
4-IBT.1400-300-300-400-400-920	255-3/16	57-3/4	57-1/16	51-13/16	5-1/4	72	10-3/4	2-11/16	62-13/16	119-1/8	183-5/16	218-9/16	4-5/8	36-1/4	41-7/8	7-1/2	28-1/2	34	18-1/2	8-3/4	8-1/2	26-1/2	4-1/8	26-1/2	1	4	4-1/2	41-1/8	23-1/2	52-7/8
4-IBT.1600-400-400-400-400-920	255-3/16	57-3/4	57-1/16	51-13/16	5-1/4	72	10-3/4	2-11/16	62-13/16	119-1/8	183-5/16	218-9/16	4-5/8	36-1/4	41-7/8	7-1/2	28-1/2	34	18-1/2	8-3/4	8-1/2	26-1/2	4-1/8	26-1/2	1	4	4-1/2	41-1/8	23-1/2	52-7/8
5-IBT.400-925	205-1/16	66-3/8	59-15/16	54-11/16	5-1/4	72	10-3/4	2-11/16	N/A	N/A	134-3/16	169-7/16	4-5/8	47	48-7/8	7-1/2	31-1/2	34	18-1/2	8-3/4	10-3/4	32	3-1/8	27-1/2	1	1	4-1/2	41-1/8	28-7/8	52-7/8
5-IBT.800-400-400-925	205-1/16	66-3/8	59-15/16	54-11/16	5-1/4	72	10-3/4	2-11/16	N/A	N/A	134-3/16	169-7/16	4-5/8	47	48-7/8	7-1/2	31-1/2	34	18-1/2	8-3/4	10-3/4	32	3-1/8	27-1/2	1	2	4-1/2	41-1/8	28-7/8	52-7/8
5-IBT.1000-300-300-400-925	265-3/16	66-3/8	59-15/16	54-11/16	5-1/4	72	10-3/4	2-11/16	62-13/16	119-1/8	193-5/16	228-9/16	4-5/8	47	48-7/8	7-1/2	31-1/2	34	18-1/2	8-3/4	10-3/4	32	3-1/8	27-1/2	1	3	4-1/2	41-1/8	28-7/8	52-7/8
5-IBT.1200-400-400-400-925	265-3/16	66-3/8	59-15/16	54-11/16	5-1/4	72	10-3/4	2-11/16	62-13/16	119-1/8	193-5/16	228-9/16	4-5/8	47	48-7/8	7-1/2	31-1/2	34	18-1/2	8-3/4	10-3/4	32	3-1/8	27-1/2	1	3	4-1/2	41-1/8	28-7/8	52-7/8
5-IBT.1400-300-300-400-400-925	265-3/16	66-3/8	59-15/16	54-11/16	5-1/4	72	10-3/4	2-11/16	62-13/16	119-1/8	193-5/16	228-9/16	4-5/8	47	48-7/8	7-1/2	31-1/2	34	18-1/2	8-3/4	10-3/4	32	3-1/8	27-1/2	1	4	4-1/2	41-1/8	28-7/8	52-7/8
5-IBT.1600-400-400-400-400-925	265-3/16	66-3/8	59-15/16	54-11/16	5-1/4	72	10-3/4	2-11/16	62-13/16	119-1/8	193-5/16	228-9/16	4-5/8	47	48-7/8	7-1/2	31-1/2	34	18-1/2	8-3/4	10-3/4	32	3-1/8	27-1/2	1	4	4-1/2	41-1/8	28-7/8	52-7/8

* ADDITIONAL UNI-STRUT/GAS CONNECTION ONLY FOR UNITS WITH 3 OR 4 FURNACES

**ALL MODELS ARE FULLY ELECTRONICALLY MODULATING

*** COMBUSTION EFFICIENCY OF EVERY UNIT IS 80.0% OVER THE ENTIRE GAS FIRING RANGE.

**** GAS PRESSURES IN TABLE ARE FOR NATURAL GAS, LP MINIMUM GAS INLET PRESSURE = 11" W.C.

MAX. EVAP WATER PRESSURE = 50 PSI @ 70 DEG. F

UNIT INFORMATION

MODEL	BTU RANGE (MBH)***			TURNDOWN	COMBUSTION	GAS PRESSURE****		STANDARD EVAPORATIVE COOLING UNIT					CELDEK EVAPORATIVE COOLING UNIT					V-BANK INFORMATION
	BURNER INPUT	BTU LOW	BTU HIGH	RATIO	EFFICIENCY***	MIN	MAX	TOT. WEIGHT	MEDIA SIZE & QTY	VEL. @ MAX. CFM	NOZZLES	MAX. FLOW RATE	TOT. WEIGHT	MEDIA SIZE & QTY	VEL. @ MAX. CFM	NOZZLES	MAX. FLOW RATE	FILTER SIZE & QTY
1-IBT.150-G10	150	20	120	6	80.0%	7" WC	14" WC	997 LBS	20"x25"x2" (3)	406 FPM	6	3 GPH	1002 LBS	20"x24"x12"	1050 FPM	12	3.9 GPH	20"x25"x2" (3)
1-IBT.200-G10	200	26.7	160	6	80.0%	7" WC	14" WC	1027 LBS	20"x25"x2" (3)	406 FPM	6	3 GPH	1032 LBS	20"x24"x12"	1050 FPM	12	3.9 GPH	20"x25"x2" (3)
1-IBT.300-150-150-G10	300	20	240	12	80.0%	7" WC	14" WC	1082 LBS	20"x25"x2" (3)	406 FPM	6	3 GPH	1087 LBS	20"x24"x12"	1050 FPM	12	3.9 GPH	20"x25"x2" (3)
1-IBT.400-200-200-G10	400	26.7	320	12	80.0%	7" WC	14" WC	1156 LBS	20"x25"x2" (3)	406 FPM	6	3 GPH	1161 LBS	20"x24"x12"	1050 FPM	12	3.9 GPH	20"x25"x2" (3)
2-IBT.200-G15	200	26.7	160	6	80.0%	7" WC	14" WC	1270 LBS	16"x20"x2" (8)	429 FPM	10	5 GPH	1265 LBS	25"x32"x12"	1080 FPM	20	6.5 GPH	16"x20"x2" (8)
2-IBT.300-G15	300	40	240	6	80.0%	7" WC	14" WC	1362 LBS	16"x20"x2" (8)	429 FPM	10	5 GPH	1357 LBS	25"x32"x12"	1080 FPM	20	6.5 GPH	16"x20"x2" (8)
2-IBT.400-G15	400	53.3	320	6	80.0%	7" WC	14" WC	1441 LBS	16"x20"x2" (8)	429 FPM	10	5 GPH	1436 LBS.	25"x32"x12"	1080 FPM	20	6.5 GPH	16"x20"x2" (8)
2-IBT.400-200-200-G15	400	26.7	320	12	80.0%	7" WC	14" WC	1329 LBS	16"x20"x2" (8)	429 FPM	10	5 GPH	1324 LBS	25"x32"x12"	1080 FPM	20	6.5 GPH	16"x20"x2" (8)
2-IBT.600-300-300-G15	600	40	480	12	80.0%	7" WC	14" WC	1483 LBS	16"x20"x2" (8)	429 FPM	10	5 GPH	1478 LBS	25"x32"x12"	1080 FPM	20	6.5 GPH	16"x20"x2" (8)
2-IBT.800-400-400-G15	800	53.3	640	12	80.0%	7" WC	14" WC	1596 LBS	16"x20"x2" (8)	429 FPM	10	5 GPH	1591 LBS	25"x32"x12"	1080 FPM	20	6.5 GPH	16"x20"x2" (8)
3-IBT.400-G18	400	53.3	320	6	80.0%	7" WC	14" WC	1787 LBS	20"x25"x2" (8)	348 FPM	14	7 GPH	1777 LBS	30"x36"x12"	1067 FPM	28	8.4 GPH	20"x25"x2" (8)
3-IBT.600-300-300-G18	600	40	480	12	80.0%	7" WC	14" WC	1905 LBS	20"x25"x2" (8)	348 FPM	14	7 GPH	1895 LBS	30"x36"x12"	1067 FPM	28	8.4 GPH	20"x25"x2" (8)
3-IBT.800-400-400-G18	800	53.3	640	12	80.0%	7" WC	14" WC	2043 LBS	20"x25"x2" (8)	348 FPM	14	7 GPH	2033 LBS	30"x36"x12"	1067 FPM	28	8.4 GPH	20"x25"x2" (8)
3-IBT.1000-300-300-400-G18	1000	40	800	20	80.0%	7" WC	14" WC	2782 LBS	20"x25"x2" (8)	348 FPM	14	7 GPH	2772 LBS	30"x36"x12"	1067 FPM	28	8.4 GPH	20"x25"x2" (8)
3-IBT.1200-400-400-400-G18	1200	53.3	960	18	80.0%	7" WC	14" WC	2894 LBS	20"x25"x2" (8)	348 FPM	14	7 GPH	2884 LBS	30"x36"x12"	1067 FPM	28	8.4 GPH	20"x25"x2" (8)
4-IBT.400-920	400	53.3	320	6	80.0%	7" WC	14" WC	2237 LBS	16"x20"x2" (15)	572 FPM	24	12 GPH	2207 LBS	36"x43"x12"	1322 FPM	35	10.15 GPH	16"x20"x2" (15)
4-IBT.800-400-400-920	800	53.3	640	12	80.0%	7" WC	14" WC	2454 LBS	16"x20"x2" (15)	572 FPM	24	12 GPH	2424 LBS	36"x43"x12"	1322 FPM	35	10.15 GPH	16"x20"x2" (15)
4-IBT.1000-300-300-400-920	1000	40	800	20	80.0%	7" WC	14" WC	3337 LBS	16"x20"x2" (15)	572 FPM	24	12 GPH	3307 LBS	36"x43"x12"	1322 FPM	35	10.15 GPH	16"x20"x2" (15)
4-IBT.1200-400-400-400-920	1200	53.3	960	18	80.0%	7" WC	14" WC	3449 LBS	16"x20"x2" (15)	572 FPM	24	12 GPH	3419 LBS	36"x43"x12"	1322 FPM	35	10.15 GPH	16"x20"x2" (15)
4-IBT.1400-300-300-400-400-920	1400	40	1120	28	80.0%	7" WC	14" WC	3561 LBS	16"x20"x2" (15)	572 FPM	24	12 GPH	3531 LBS	36"x43"x12"	1322 FPM	35	10.15 GPH	16"x20"x2" (15)
4-IBT.1600-400-400-400-400-920	1600	53.3	1280	24	80.0%	7" WC	14" WC	3673 LBS	16"x20"x2" (15)	572 FPM	24	12 GPH	3643 LBS	36"x43"x12"	1322 FPM	35	10.15 GPH	16"x20"x2" (15)
5-IBT.400-925	400	53.3	320	6	80.0%	7" WC	14" WC	2845 LBS	20"x25"x2" (12)	638 FPM	30	15 GPH	2805 LBS	45"x54"x12"	1304 FPM	42	12.6 GPH	20"x25"x2" (12)
5-IBT.800-400-400-925	800	53.3	640	12	80.0%	7" WC	14" WC	3062 LBS	20"x25"x2" (12)	638 FPM	30	15 GPH	3022 LBS	45"x54"x12"	1304 FPM	42	12.6 GPH	20"x25"x2" (12)
5-IBT.1000-300-300-400-925	1000	40	800	20	80.0%	7" WC	14" WC	3834 LBS	20"x25"x2" (12)	638 FPM	30	15 GPH	3794 LBS	45"x54"x12"	1304 FPM	42	12.6 GPH	20"x25"x2" (12)
5-IBT.1200-400-400-400-925	1200	53.3	960	18	80.0%	7" WC	14" WC	3946 LBS	20"x25"x2" (12)	638 FPM	30	15 GPH	3906 LBS	45"x54"x12"	1304 FPM	42	12.6 GPH	20"x25"x2" (12)
5-IBT.1400-300-300-400-400-925	1400	40	1120	28	80.0%	7" WC	14" WC	4058 LBS	20"x25"x2" (12)	638 FPM	30	15 GPH	4018 LBS	45"x54"x12"	1304 FPM	42	12.6 GPH	20"x25"x2" (12)